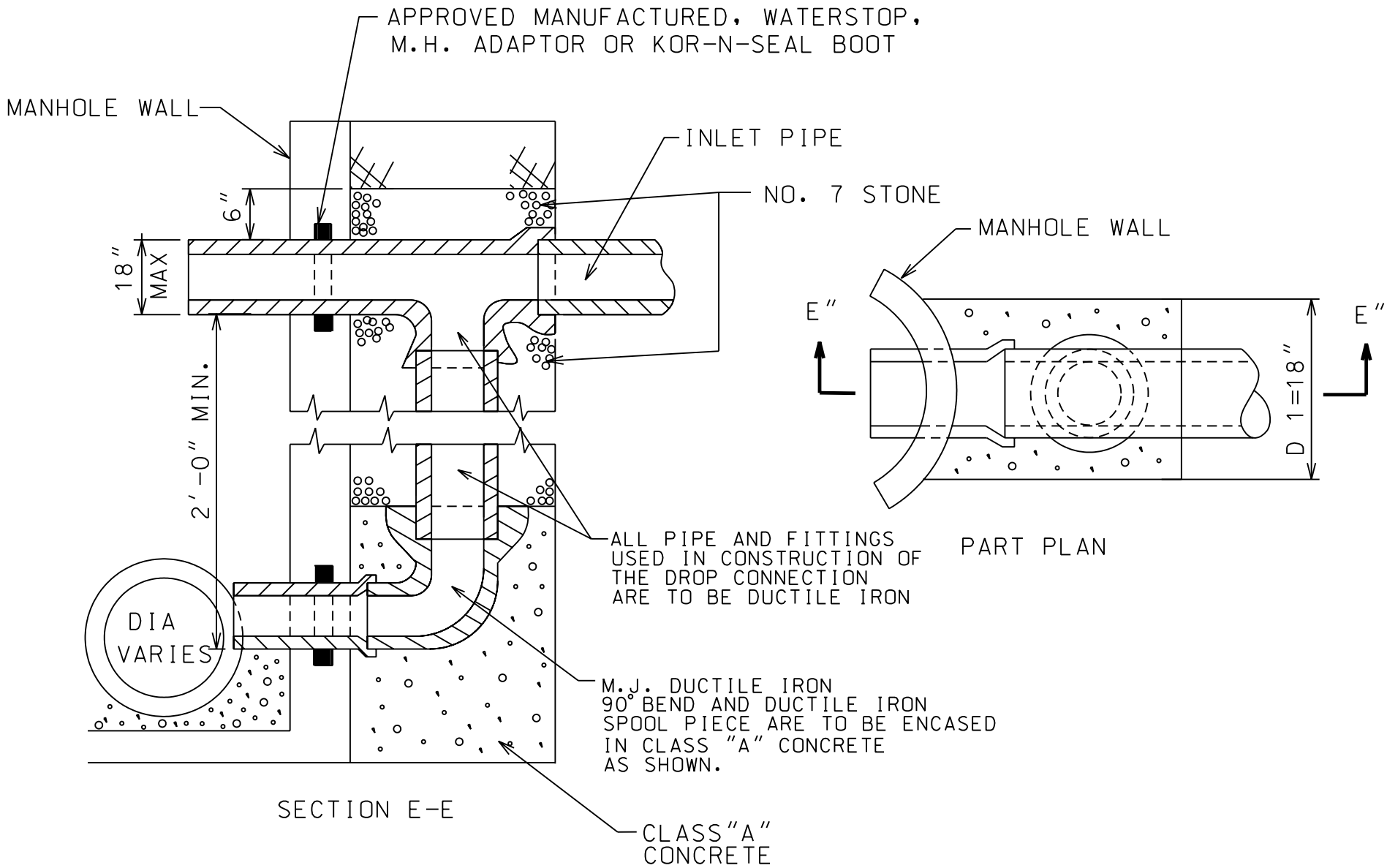

TYPICAL VERTICAL DROP INLET AT MANHOLE

200-360.2

200-360.2